THRUSTER BRAKE ELDY SMD (630-121/06)

TECHNICAL DATA

ITEM	BRAKE	THRUSTER
MODEL	SMD 630-121/06	ELDY - 121/06
DRUM DIA	630 mm	----------
BRAKE SHOE FRICTION COEFFICIENT	Asbestos free Without Rivet / BA	----------
BRAKING TORQUE	370 Kgm / 3700 Nm	----------
THRUST	----------	121 Kg
STROKE	----------	60 mm
OIL + CAPACITY	----------	Transformer Oil IS-335 (9.8 Liters)
RATED VOLTAGE	----------	415 V ± 10% 50 Hz 3Ph AC
CURRENT AT 415 V AC INRUSH CURRENT	----------	2.0 Amps 10.0 Amps.(Inrush)
INSULATION	----------	F Class
INGRESS PROTECTION	----------	IP - 65 IS/IEC 60529 (2001)
AMBIENT TEMPERATURE	----------	50° C
POWER	----------	410 Watt
WEIGHT	192 Kg	33 Kg
PAINTING	Hammertone Gray Paint	
LAF	Asbestos Free Liner	
OPTIONAL FEATURES		
SCD	Aluminum Brake Shoe as per DIN - 15435	
LWA	Lining Wear Adjuster	
LWI	Lining Wear Indicator Limit Switch	
SS	AISA 420 Hardened & Tampered Stainless Steel Pins	
PN	Lubricators on Pins	
OL	Open Brake Limit Switch	
MS	Manual Opening & Locking System	

*** Non-Standard voltages available on enquiry**

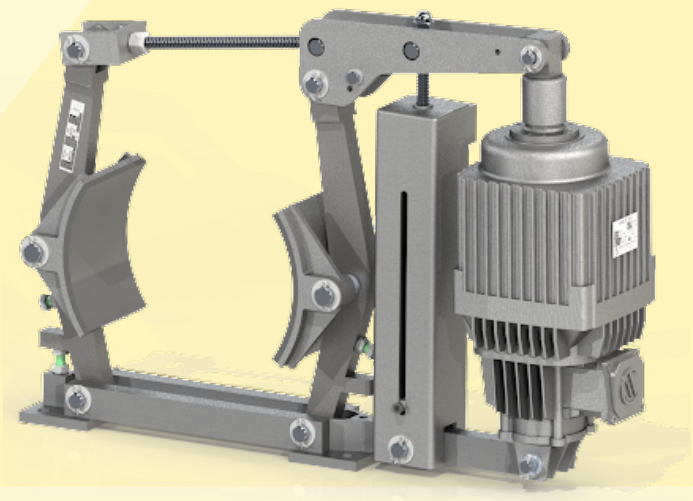

SELECTION OF BRAKE SIZE

SMD Thruster brakes are steel fabricated frames with Eldy Thruster as per din standard.

Excellent designs & good manufacturing process ensure a reliable product.

The brake torque must be => than motor full load as referred with drum. Formula as below:

T = Torque in Kgm = $\frac{716 \times Hp}{rpm}$

T = Torque in Nm = $\frac{9552 \times Kw}{rpm}$

Where Hp/Kw = motor output & rpm = Rev/minute

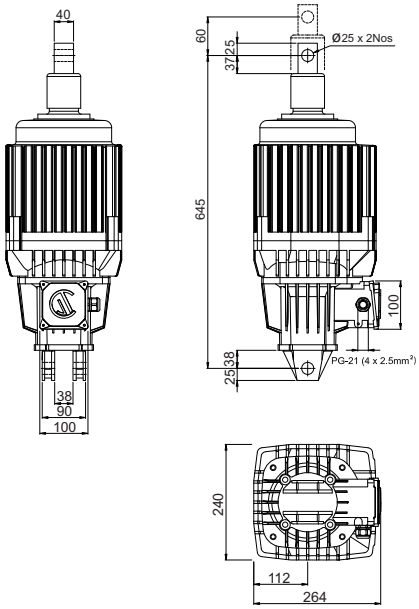

ELDY 121-06

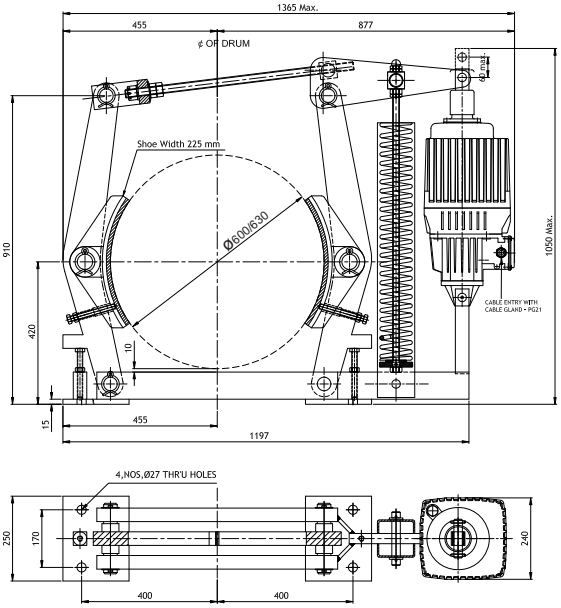

SMD 600-630-121/06-LAF

H. O. Unit -I : C-15/16, Nand Jyot Industrial Estate, Andheri-Kurla Road, Mumbai - 400072 ,
Tel : (022) 42469700/730
E-mail : sales@socgroup.in

Unit - II: Plot No. 4912, G. I. D. C., Phase IV, Vatva, Ahmedabad - 382445
Tel.: (079) 68169700/702/712
E-mail : enquiry2@socgroup.in

Visit us at :
www.speedocontrols.com
www.socremote.com
www.socjoystick.com

SPEED-O-CONTROLS PVT. LTD.
CRANE CONTROL GEAR

V5
26/09/24