INDUSTRIAL BRAKES
SDM 630-201/06

TECHNICAL DATA

ITEM	BRAKE	THRUSTER
MODEL	SDM 630-201/06	ELDY - 201/06
DRUM DIA	630 mm	----------
SHOE WIDTH	225 MM	----------
BRAKE SHOE	Aluminum + Asbestos free Liner	----------
FRICTION COEFFICIENT	µ 0.42	----------
BRAKING TORQUE	580 Kg-m - 5800 Nm	----------
THRUST	----------	200 Kg
STROKE	----------	60 mm
OIL + CAPACITY	----------	Transformer Oil IS - 335 (10 Liters)
RATED VOLTAGE	----------	415 V ± 10% 50 Hz 3Ph AC
CURRENT	----------	1.4 Amps (±10%)
INSULATION	----------	F Class
INGRESS PROTECTION	----------	IP - 65 IS/IEC 60529 (2001)
AMBIENT TEMP	----------	50° C
POWER	----------	485 Watt
WEIGHT	134 Kg	35 Kg

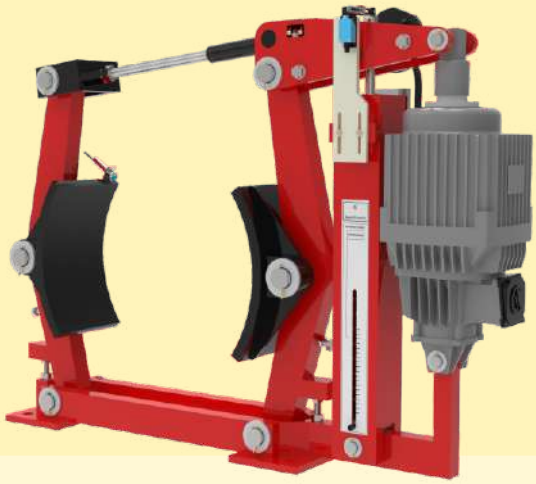

LWC	LINING WEAR COMPENSATOR
LWI	LINING WEAR INDICATOR
HRL	HAND RELEASE LEVER
LWLS	LINING WEAR LIMIT SWITCH
BRLS	BRAKE RELEASE LIMIT SWITCH
BELS	BRAKE ENGAGING LIMIT SWITCH
SS	STAINLESS STEEL PINS
LUB	LUBRICATORS ON MAIN PINS
SV	SPECIAL VOLTAGE
SPA	PAINT ACCORDING TO CUSTOMER SPECIFICATION

SELECTION OF BRAKE SIZE

SDM Thruster brakes are steel fabricated frames with Eldy Thruster as per din standard.

Excellent designs & good manufacturing process ensure a reliable product.

The brake torque must be => than motor full load as referred with drum. Formula as below:

$$T = \text{Torque in Kgm} = \frac{716 \times Hp}{rpm}$$

$$T = \text{Torque in Nm} = \frac{9552 \times Kw}{rpm}$$

Where Hp/Kw = motor output & rpm = Rev/minute

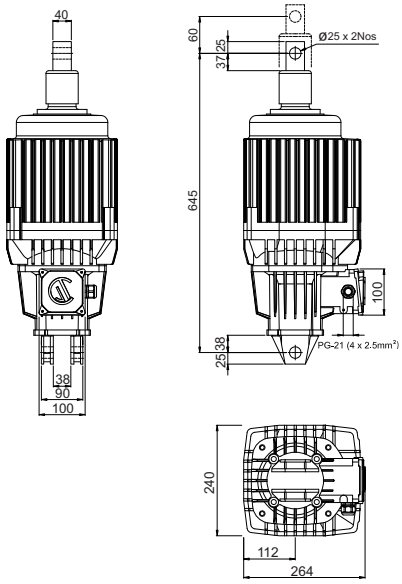

ELDY 201-06

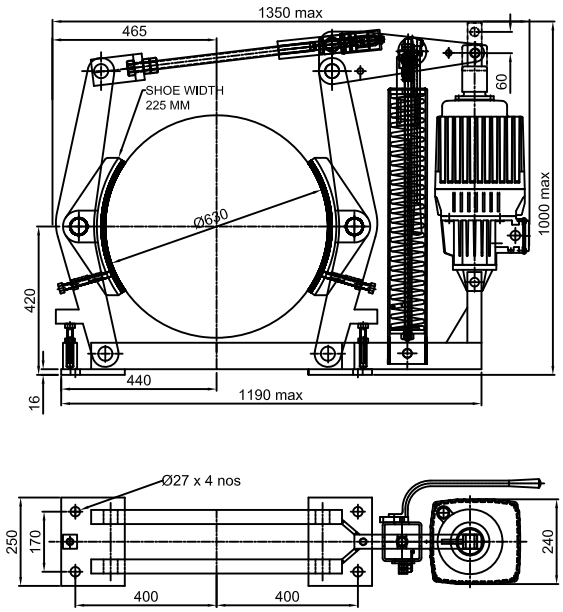

SDM-630-201/06

H. O. Unit -I : C-15/16, Nand Jyot Industrial Estate, Andheri-Kurla Road, Mumbai - 400072 ,
Tel : (022) 42469700/730
E-mail : sales@socgroup.in

Unit - II: Plot No. 4912, G. I. D. C., Phase IV, Vatva, Ahmedabad - 382445
Tel.: (079) 68169700/702/712
E-mail : enquiry2@socgroup.in

Visit us at :
www.speedocontrols.com
www.socremote.com
www.socjoystick.com

SPEED-O-CONTROLS PVT. LTD.
CRANE CONTROL GEAR

V6
18/09/25